Province of British Columbia
Ministry of Environment

SOURCE TESTING CODE FOR THE MEASUREMENT OF EMISSIONS OF PARTICULATES FROM STATIONARY SOURCES

Prepared by

Air Quality Engineering Unit
WASTE MANAGEMENT BRANCH

Victoria, B.C.
1982

Canadian Cataloguing in Publication Data
Keshvani, K. A. (Kurban Ali), 1936-
Source testing code for the measurement of emissions of particulates from stationary sources

Prepared by K.A. Keshvani. cf. p. iii.
Bibliography: p.
ISBN 0-7719-9154-1

1. Air - Pollution - British Columbia - Measurement. I. British Columbia. Air Quality Engineering Unit. II. Title.

TD883.7.C32B74 363.7'39264'09711 C83-092082-X

© Copyright 1983. B.C. Ministry of Environment.
First Printing 1983.

PREFACE

This code presents five standard test methods that are used in various combinations for the measurement of emissions of particulate matter from stationary sources when such data are required under the Waste Management Act of the Province of British Columbia.

It replaces the "Source Testing Manual for the Determination of Discharges to the Atmosphere, 4th Edition, August 1976" published by the Pollution Control Branch of the Water Resources Service.

The code covers source testing procedures for personnel trained and experienced in air pollution monitoring, and should not be considered a training manual. It is designed to provide the most reliable methods available at the present time for the measurement of particulate emissions to the atmosphere, and is subject to periodic review in order to keep it abreast of technical progress in source testing procedures. Users of this code are encouraged to forward their suggestions to the Ministry. All inquiries and comments regarding this code should be directed to the Head, Air Quality Engineering Unit, Waste Management Branch, Parliament Buildings, Victoria, B.C. V8V 1X5.

Procedural details on the measurement methods specified in this code will be described in manuals to be published by the Environmental Laboratory, Ministry of Environment.

R. H. Ferguson,
Director,
Waste Management Branch.

ACKNOWLEDGEMENTS

This material has been prepared principally by K. A. Keshvani, with the following involved in reviewing the document:

B.B. Manna, Waste Management Branch
R. Bollans, Waste Management Regional Operations
N. McQuaker, Environmental Laboratory
D. Sandberg, Environmental Laboratory

Thanks are extended to those individuals and agencies which provided very useful comments on pre-publication drafts, including the Greater Vancouver Regional District and Environment Canada.

TABLE OF CONTENTS

	Page
PREFACE	iii
ACKNOWLEDGEMENTS	iv
LIST OF FIGURES	vii
LIST OF TABLES	viii
METHOD 1: DETERMINATION OF SAMPLING SITE AND TRAVERSE POINTS	1
1.1 Principle	
1.2 Applicability	
1.3 Procedure	
METHOD 2: DETERMINATION OF STACK GAS VELOCITY AND VOLUMETRIC FLOW RATE	9
2.1 Principle	
2.2 Applicability	
2.3 Apparatus	
2.4 Procedure	
2.5 Calculations	
METHOD 3: DETERMINATION OF GAS COMPOSITION AND MOLECULAR WEIGHT	17
3.1 Principle	
3.2 Applicability	
3.3 Apparatus	
3.4 Procedure	
3.5 Calculations	
METHOD 4: DETERMINATION OF MOISTURE CONTENT OF STACK GAS	23
4.1 Principle	
4.2 Applicability	
4.3 Apparatus	
4.4 Procedure	
4.5 Calculations	

TABLE OF CONTENTS (Continued)

Page

METHOD 5: DETERMINATION OF PARTICULATE EMISSIONS FROM STATIONARY SOURCES 31

5.1 Principle

5.2 Applicability

5.3 Apparatus

5.4 Procedure

5.5 Calculations

5.6 Test Results

BIBLIOGRAPHY 49

APPENDIX 51

LIST OF FIGURES

Figure		Page
1.1	Minimum Number of Traverse Points for Particulate Traverses	3
1.2	Minimum Number of Traverse Points for Velocity Traverses	4
1.3	Location of Traverse Points on Circular Cross Section Divided into 12 Equal Areas	6
1.4	Location of Traverse Points on Rectangular Cross Section Divided into 12 Equal Areas	6
2.1	S-Type Pitot Tube and Manometer Assembly	10
2.2	Design Specifications for S-Type Pitot Tube	11
3.1	Train for Integrated Gas Sampling	19
4.1	High Temperature Psychrometric Chart for Air-Water Vapour Mixtures at 101.3 kPa	24
4.2	Moisture Sampling Train	25
5.1	Particulate Sampling Train	32
5.2	S-Type Pitot Tube	34
5.3	Placement of Pitobe (Pitot Tube Assembly) Components	35

LIST OF TABLES

Table		Page
1.1	Minimum Number of Sampling Points Per Traverse for Circular Ducts for a Sampling Station Located at Least Eight Diameters Downstream and Two Diameters Upstream of a Flow Disturbance	2
1.2	Cross Sectional Layout for Rectangular Stacks	5
1.3	Location of Traverse Points in Circular Stacks	7
2.1	Velocity Traverse Data Sheet	13
3.1	Gas Composition Data Sheet	21
4.1	Moisture Data Sheet	27
5.1	Particulate Test Data Sheet	40
5.2	Moisture Analysis Data Sheet	41
5.3	Particulate Matter Analytical Data Sheet	42

METHOD 1:

Determination of Sampling Site and Traverse Points

METHOD 1: DETERMINATION OF SAMPLING SITE AND TRAVERSE POINTS

1.1 PRINCIPLE

A sampling site including the number and location of traverse points is selected to aid in obtaining a representative sample.

1.2 APPLICABILITY

This method is applicable to flowing gas streams in ducts, stacks, and flues. The method cannot be used when any of the following conditions apply:

i) Flow is cyclonic or swirling i.e. the mean rotational angle for all sampling points exceeds 10°. Mean rotational angle is defined as the mean angle at all sampling points at which a null pressure reading is obtained in relation to a zero reference angle. The zero reference angle is defined as the stack cross-sectional plane.

ii) Stack cross section is less than 0.071 m^2 (or 30.5 cm diameter).

iii) Measurement site is less than two stack diameters downstream or less than half a diameter upstream from a flow disturbance.

1.3 PROCEDURE

Selection of sampling site and minimum number of traverse points.

Preferably select a sampling site in a straight, vertical length of duct or stack at least eight duct or stack diameters downstream and two duct or stack diameters upstream from any flow disturbances such as a bend, expansion, contraction, junction, stack exit or visible flame, etc., in order to reduce the number of sampling points to the required minimum. A round section of the duct or stack shall be preferred over a rectangular section, all other variables being equal. For a rectangular duct, the equivalent diameter is defined in Equation 1.1.

$$D_e = \frac{2\ AB}{A + B} \qquad \text{Eq. 1.1}$$

Where

D_e = equivalent diameter, m

A,B = internal dimensions of rectangular duct, m

When the above sampling site criteria can be met, the minimum number of traverse points required can be determined from Table 1.1

For rectangular stacks use equivalent diameter and Table 1.1 to determine the minimum number of sample points. Then divide the cross section into as many equal rectangular areas as there are traverse points such that the ratio of length to width of the elemental area is between one and two.

TABLE 1.1

MINIMUM NUMBER OF SAMPLING POINTS FOR SAMPLING SITES LOCATED AT LEAST EIGHT DIAMETERS DOWNSTREAM AND TWO DIAMETERS UPSTREAM OF A FLOW DISTURBANCE

Duct Diameter m	Required Minimum Number of Sampling Points	
	Circular Duct	Rectangular Duct
>0.61	12	12
0.30 - 0.61	8	9

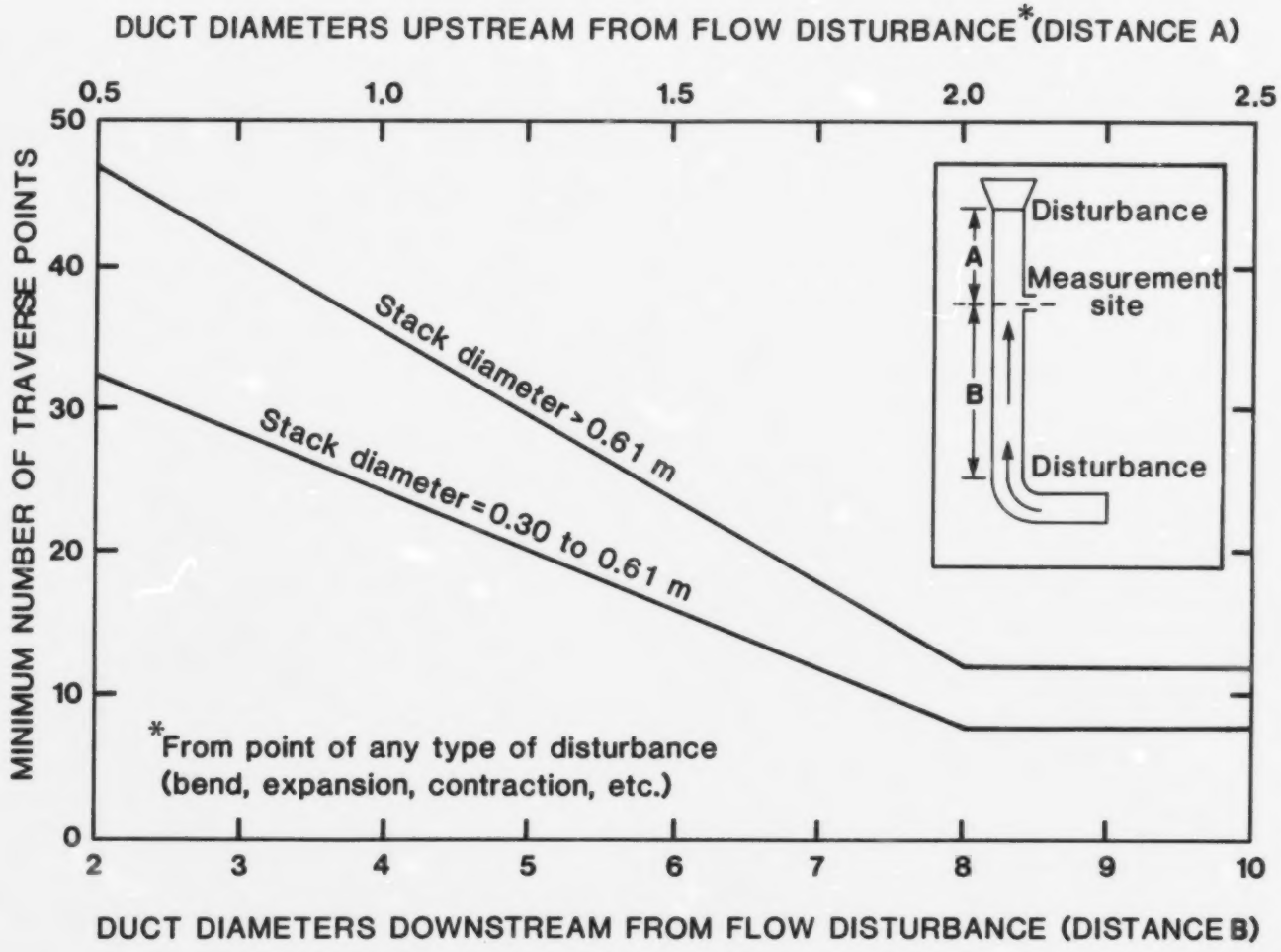

Figure 1.1 Minimum Number of Traverse Points for Particulate Traverses

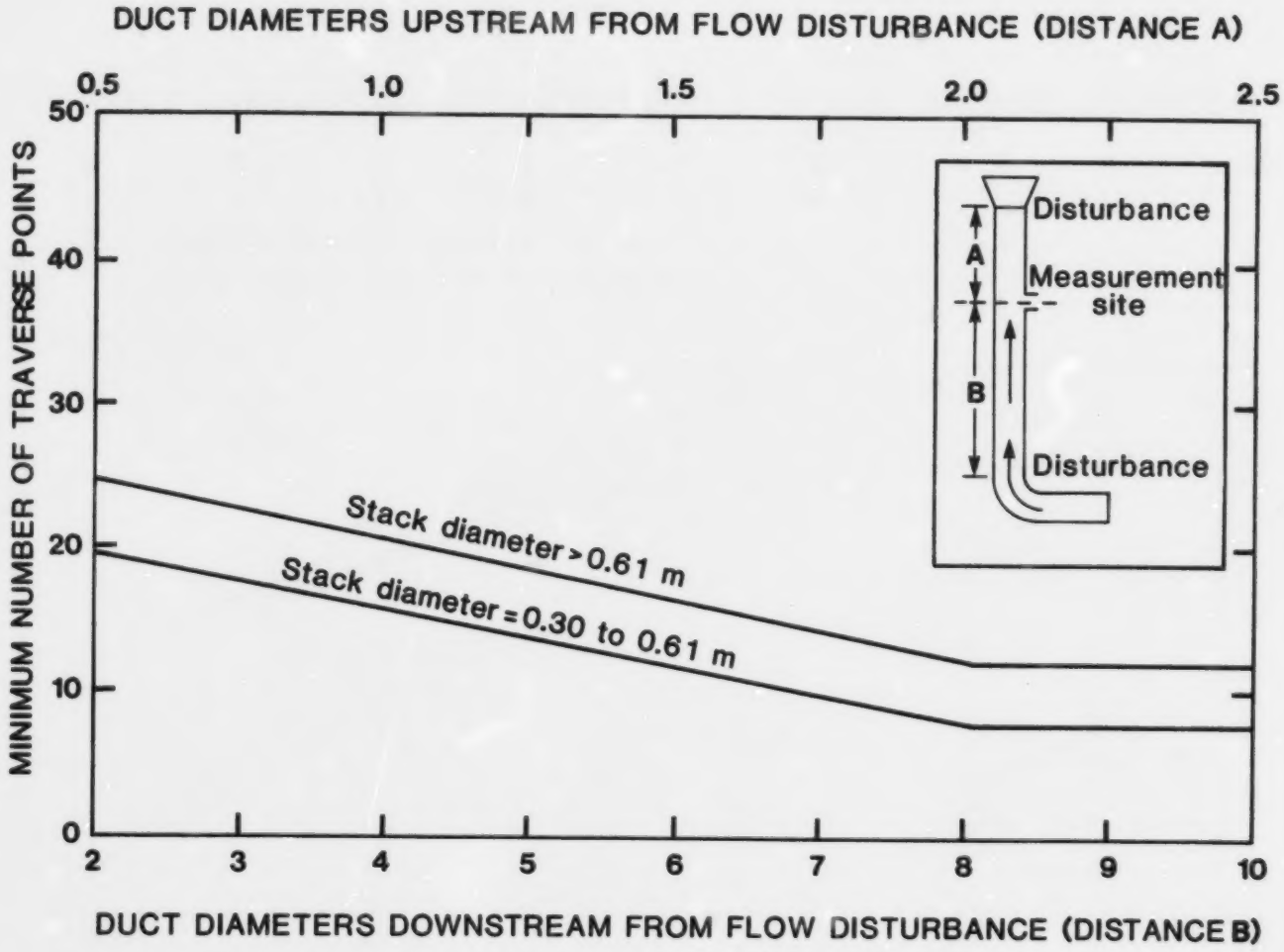

Figure 1.2 Minimum Number of Traverse Points for Velocity Traverses

When the eight and two diameter criteria cannot be met, the minimum number of traverse points is determined from Figure 1.1 for particulate sampling and Figure 1.2 for velocity measurement. Before referring to the figures, determine the distance from the sampling site to the nearest upstream and downstream disturbance and divide each distance by the stack diameter to determine the distance in terms of the number of duct diameters. Then, determine from Figure 1.1 or 1.2 the minimum number of traverse points that corresponds to (i) the number of duct diameters upstream and (ii) the number of duct diameters downstream. Select the higher of the two minimum numbers of traverse points, or a greater value, so that for circular stacks the number is a multiple of 4 and for rectangular stacks the number is one of those shown in Table 1.2. For circular stacks traverses must be conducted in two perpendicular directions (see Figure 1.3).

TABLE 1.2

CROSS SECTIONAL LAYOUT FOR RECTANGULAR STACKS

Number of Traverse Points	Matrix Layout
9	3x3
12	4x3
16	4x4
20	5x4
25	5x5
30	6x5
36	6x6
42	7x6
49	7x7

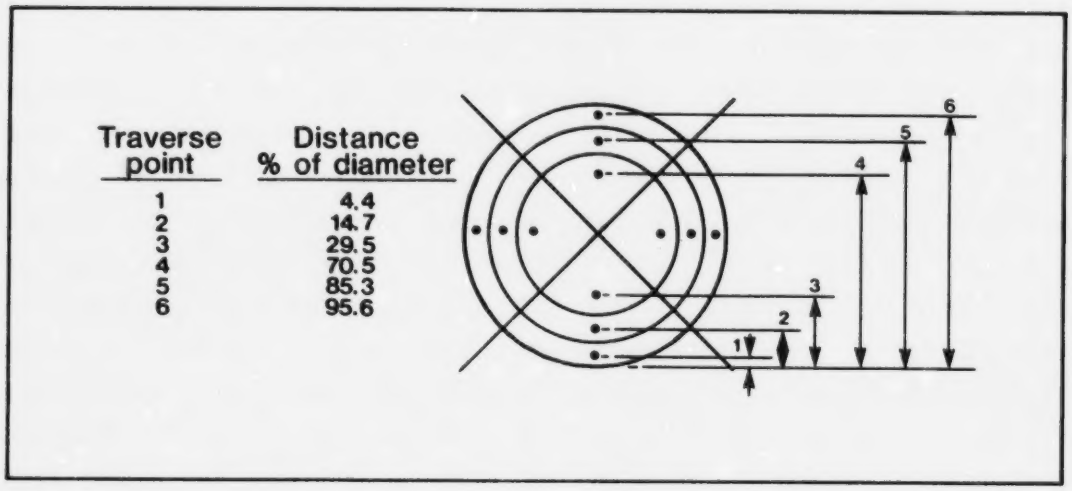

Figure 1.3 Location of Traverse Points on Circular Cross Section Divided into 12 Equal Areas

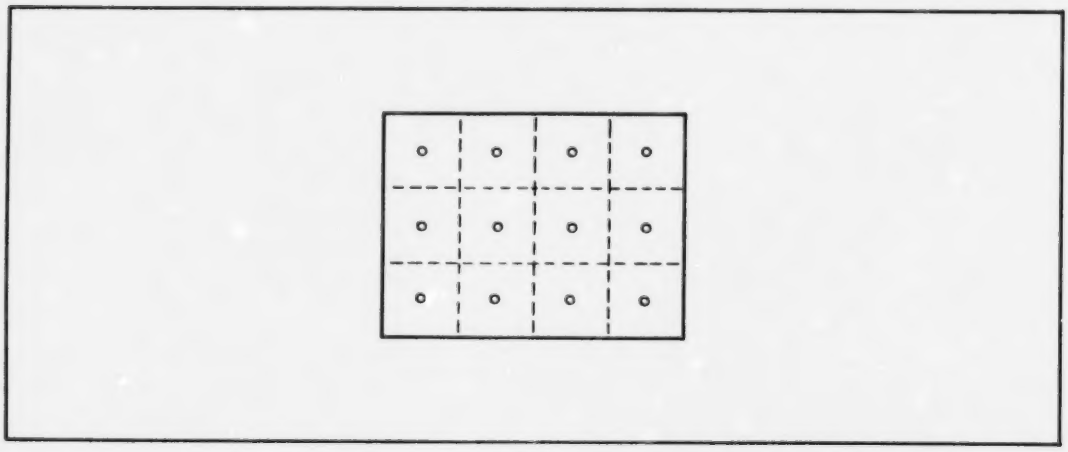

Figure 1.4 Location of Traverse Points on Rectangular Cross Section Divided into 12 Equal Areas

TABLE 1.3

LOCATION OF TRAVERSE POINTS IN CIRCULAR STACKS

Percent of Stack Diameter from Inside Wall to Traverse Point												
Traverse Point Number On a Diameter	Number of traverse points on a diameter											
	2	4	6	8	10	12	14	16	18	20	22	24
1	14.6	6.7	4.4	3.3	2.5	2.1	1.8	1.6	1.4	1.3	1.1	1.1
2	85.4	25.0	14.7	10.5	8.2	6.7	5.7	4.9	4.4	3.9	3.5	3.2
3		75.0	29.5	19.4	14.6	11.8	9.9	8.5	7.5	6.7	6.0	5.5
4		93.3	70.5	32.3	22.6	17.7	14.6	12.5	10.9	9.7	8.7	7.9
5			85.3	67.7	34.2	25.0	20.1	16.9	14.6	12.9	11.6	10.5
6			95.6	80.6	65.8	35.5	26.9	22.0	18.8	16.5	14.6	13.2
7				89.5	77.4	64.5	36.6	28.3	23.6	20.4	18.0	16.1
8				96.7	85.4	75.0	63.4	37.5	29.6	25.0	21.8	19.4
9					91.8	82.3	73.1	62.5	38.2	30.6	26.1	23.0
10					97.5	88.2	79.9	71.7	61.8	38.8	31.5	27.2
11						93.3	85.4	78.0	70.4	61.2	39.3	32.3
12						97.9	90.1	83.1	76.4	69.4	60.7	39.8
13							94.3	87.5	81.2	75.0	68.5	60.2
14							98.2	91.5	85.4	79.6	73.9	67.7
15								95.1	89.1	83.5	78.2	72.8
16								98.4	92.5	87.1	82.0	77.0
17									95.6	90.3	85.4	80.6
18									98.6	93.3	88.4	83.9
19										96.1	91.3	86.8
20										98.7	94.0	89.5
21											96.5	92.1
22											98.9	94.5
23												96.8
24												98.9

Location Of Traverse Points

For circular stacks the sampling points shall be located at the centroid of equal areas as indicated in Figure 1.3 and Table 1.3

For rectangular stacks, the sampling points shall be located at the centroid of equal area rectangular zones as shown in Figure 1.4.

For particulate traverses, one of the diameters should be in a plane containing the greatest expected concentration variation e.g. after bends one diameter should be in the plane of the bend. This requirement becomes less critical as the distance from the disturbance increases.

In addition, if a traverse point falls within 2.5 cm (stack diameter D > 0.61 m) or 1.3 cm (stack diameter D < 0.61 m) of the stack walls, relocate the traverse points to a distance of 2.5 cm (D > 0.61 m) and 1.3 cm (D < 0.61 m) away from the walls or equal to the nozzle diameter which ever is greater. These relocated traverse points shall be the adjusted traverse points.

Whenever two successive traverse points are combined to form a single adjusted traverse point, treat the adjusted point as two separate traverse points both in the sampling procedure and in recording the data.

METHOD 2:

Determination of Stack Gas Velocity and Volumetric Flow Rate

METHOD 2: DETERMINATION OF STACK GAS VELOCITY AND VOLUMETRIC FLOW RATE

2.1 PRINCIPLE

Stack gas velocity is determined from gas density and from measurement of velocity pressure with an S-type (Stauscheibe type) pitot tube. A standard pitot tube may be used where plugging of the tube openings is not a problem. Volumetric flow rate is determined from measurements of the following stack parameters: gas velocity, temperature, pressure, dry gas composition, moisture content and diameter.

2.2 APPLICABILITY

The method is applicable for the measurement of the average velocity of a gas stream and quantifying gas flow. If the stack gas velocity varies with respect to time, mean values for velocity of each traverse point must be obtained using special procedure requiring prior authorization of the Ministry. Method 2 is not applicable if cyclonic flows exist (see Method 1) or if there are fluctuating velocity pressure (Δp) readings where the fluctuation exceeds ±20% of the average reading. If attempts to eliminate cyclonic flows or fluctuating ΔP readings are unsuccessful reference should be made to the Ministry.

2.3 APPARATUS

S-Type Pitot Tube and Thermocouple

A stainless steel, or "Inconel" calibrated S-type pitot tube with an attached, calibrated, sheathed thermocouple shall be used to measure the gas velocity head and temperature at each traverse point in the stack. Figure 2.1 illustrates the S-type pitot tube. A properly constructed S-type pitot tube shall meet the design specifications of Figure 2.2 An inclined manometer or equivalent device used to measure velocity head shall have an accuracy of 0.001 kPa. The thermocouple shall have an accuracy of 1.5

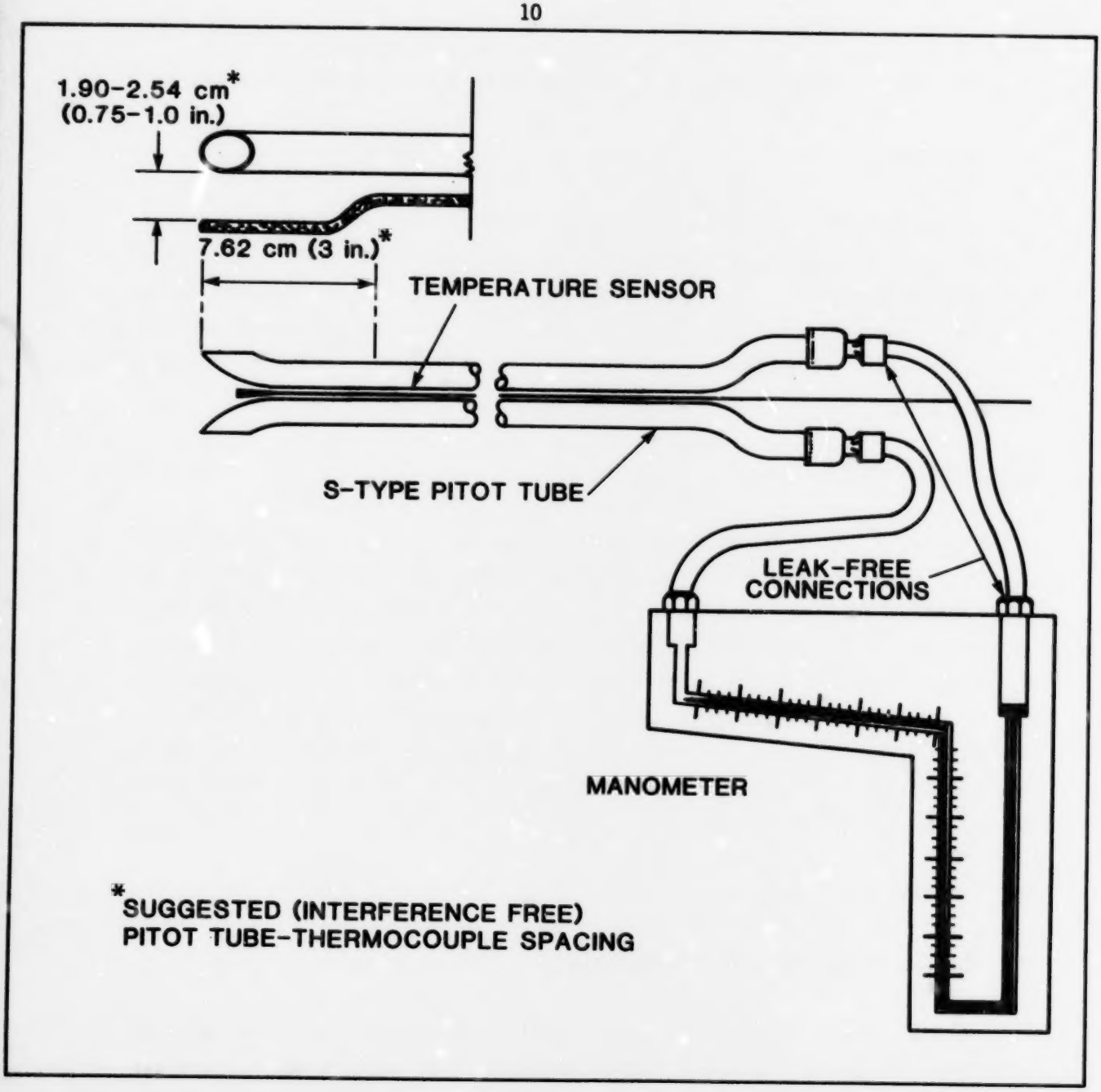

Figure 2.1 S-Type Pitot Tube and Manometer Assembly

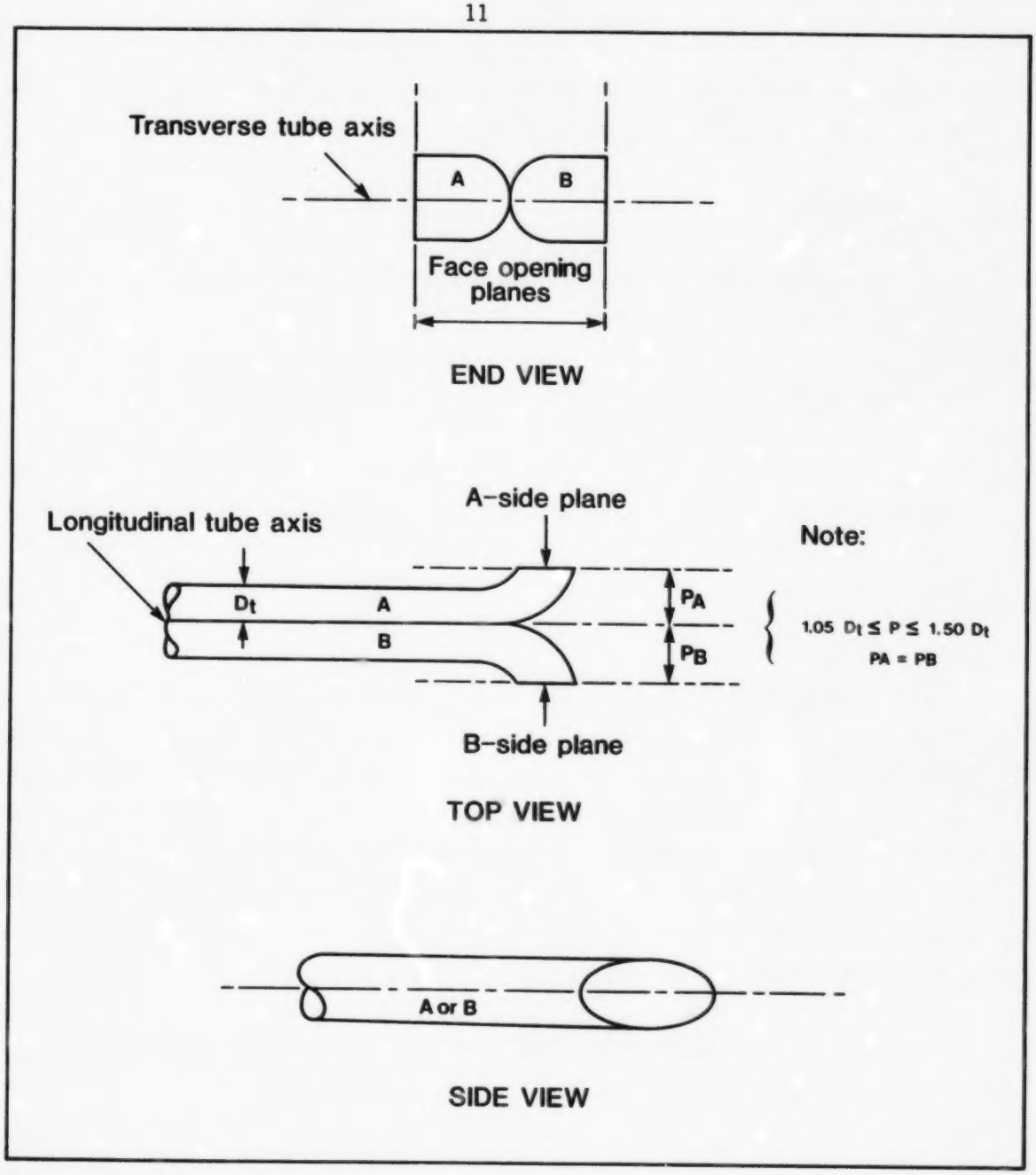

Figure 2.2 Design Specifications for S-Type Pitot Tube

percent of the minimum absolute stack temperature. The S-type pitot tube shall be calibrated in accordance with the procedure given in the Appendix.

Barometer

A barometer shall be used to measure the atmospheric pressure to within 0.35 kPa at the sampling site.

2.4 PROCEDURE

Set up the apparatus as shown in Figure 2.1. Make sure all connections are leak free. Measure the stack dimensions and determine the traverse points according to Method 1. Measure the velocity and temperature concurrently at these points and record the measurements on the data sheet illustrated in Table 2.1.

Determine the stack gas static pressure by disconnecting one leg of the pitot tube from the manometer and then rotating the assembly until the openings in the pitot tube are perpendicular to the gas flow. This reading may be positive or negative depending on the conditions in the stack. If a magnehelic is used to measure static pressure it will be necessary to switch over the pitot connection in case of negative static pressure. This will allow a negative static pressure to be indicated on a positive scale. Record the atmospheric pressure, P_b.

Determine the stack gas molecular weight according to Method 3.

TABLE 2.1

VELOCITY TRAVERSE DATA SHEET

Plant _____ Stack dia. (m) _____

Location _____ Barometric press. (kPa) _____

Test _____ Static press. in stack (kPa) _____

Date _____ S-type pitot coefficient _____

Time started _____ Test conducted by _____

Time completed _____

Traverse point	Stack gas velocity pressure Δp	Stack gas temperature T_s	Stack gas velocity U_s
		(U_s) Average	

2.5 CALCULATIONS

Determine the stack gas velocity at each traverse point using Equation 2.1.

$$U_s = K_p \cdot C_p \left[\frac{T_s \cdot \Delta p}{P_s \cdot M_s} \right]^{1/2} \qquad \text{Eq. 2.1}$$

Where

U_s = stack gas velocity, m/s

K_p = constant, $128.53 \frac{m}{s} \left[\frac{kg}{(K)(kmol)} \right]^{1/2}$

C_p = S-type pitot tube coefficient, dimensionless

T_s = absolute stack gas temperature, K

Δp = stack gas velocity pressure, kPa

P_s = absolute stack gas pressure, see Equation 2.2, kPa

M_s = molecular weight of stack gas on wet basis, $\frac{kg}{kmol}$
(Refer to Method 3)

Determine absolute stack gas pressure using Equation 2.2.

$$P_s = P_b + P_{stat} \qquad \text{Eq. 2.2}$$

Where

P_s = absolute stack gas pressure, kPa

P_b = barometric pressure at the sampling station, kPa

P_{stat} = stack gas static pressure, kPa

Determine the average stack gas velocity by averaging the individual gas velocities at each point in the stack.

Determine the volumetric gas flow rate using Equation 2.3.

$$Q_s = (U_s)_{avg} \cdot A_s \cdot (1-B_{wo}) \frac{(T_{ref}) \cdot (P_s)}{(T_s)_{avg} \cdot (P_{ref})} \qquad \text{Eq.2.3}$$

Where

Q_s = volumetric gas flow rate on dry basis at reference conditions, m^3/s

$(U_s)_{avg}$ = average gas velocity, m/s

A_s = cross-sectional area of stack, m^2

B_{wo} = fraction by volume of water vapour in gas (Refer to Method 4, Equation 4.3)

T_{ref} = absolute temperature at reference condition, 293 K

$(T_s)_{avg}$ = average absolute stack gas temperature, K

P_s = absolute stack gas pressure, kPa

P_{ref} = absolute pressure at reference conditions, 101.3 kPa

METHOD 3:

Determination of Gas Composition and Molecular Weight

METHOD 3: DETERMINATION OF GAS COMPOSITION AND MOLECULAR WEIGHT

3.1 PRINCIPLE

The molecular weight of the stack gas varies with the process under consideration and is calculated from an analysis of the gas composition. After isolation of the sample, analysis of the stack gas composition for CO_2 and O_2 may be achieved by selective absorption using liquid reagents (Fyrite and Orsat Analyzers) or by gas chromatography.

3.2 APPLICABILITY

The method is applicable to gas streams where all significant concentrations of the gases present can be analyzed.

3.3 APPARATUS

While grab sampling is acceptable in many cases, integrated sampling should be used for gas streams with varying composition.

(a) Grab Sampling

i) Sampling Probe

A stainless steel or Pyrex probe equipped with a filter to remove heavy particulate matter.

ii) Sample Extraction Device

A one way squeeze bulb or a leak-free diaphragm-type pump.

iii) Moisture Removing Device

A device to remove water from the gas stream without removing the gaseous components required when analysis is to be performed by gas chromatography.

iv) Gas Analyzer

Orsat or Fyrite analyzer or alternate device such as gas chromatograph provided that gas component percentage is measurable to at least 0.2% and is determined on a dry basis.

(b) Integrated Sampling (Figure 3.1)

i) Sampling Probe - as above

ii) Sample Extraction Device

A leak free diaphragm-type pump or equivalent; a device to dampen diaphragm pulsation effect.

iii) Moisture Removing Device - as above

iv) Valve

A needle valve to adjust sample gas flow rate.

v) Flow Rate Meter

Rotameter or equivalent device to measure flow within ±2%.

vi) Flexible Bag

Leak free, inert, Tedlar bag, suggested capacity 30 litres.

vii) Gas Analyzer - as above

3.4 PROCEDURE

(a) Grab Sampling

Assemble the analyzer, calibrate and ensure that all connections are leak free. Position the probe at the centre of the stack or at a point no closer than 1.0 m to the walls of the stack. Purge the sampling system and

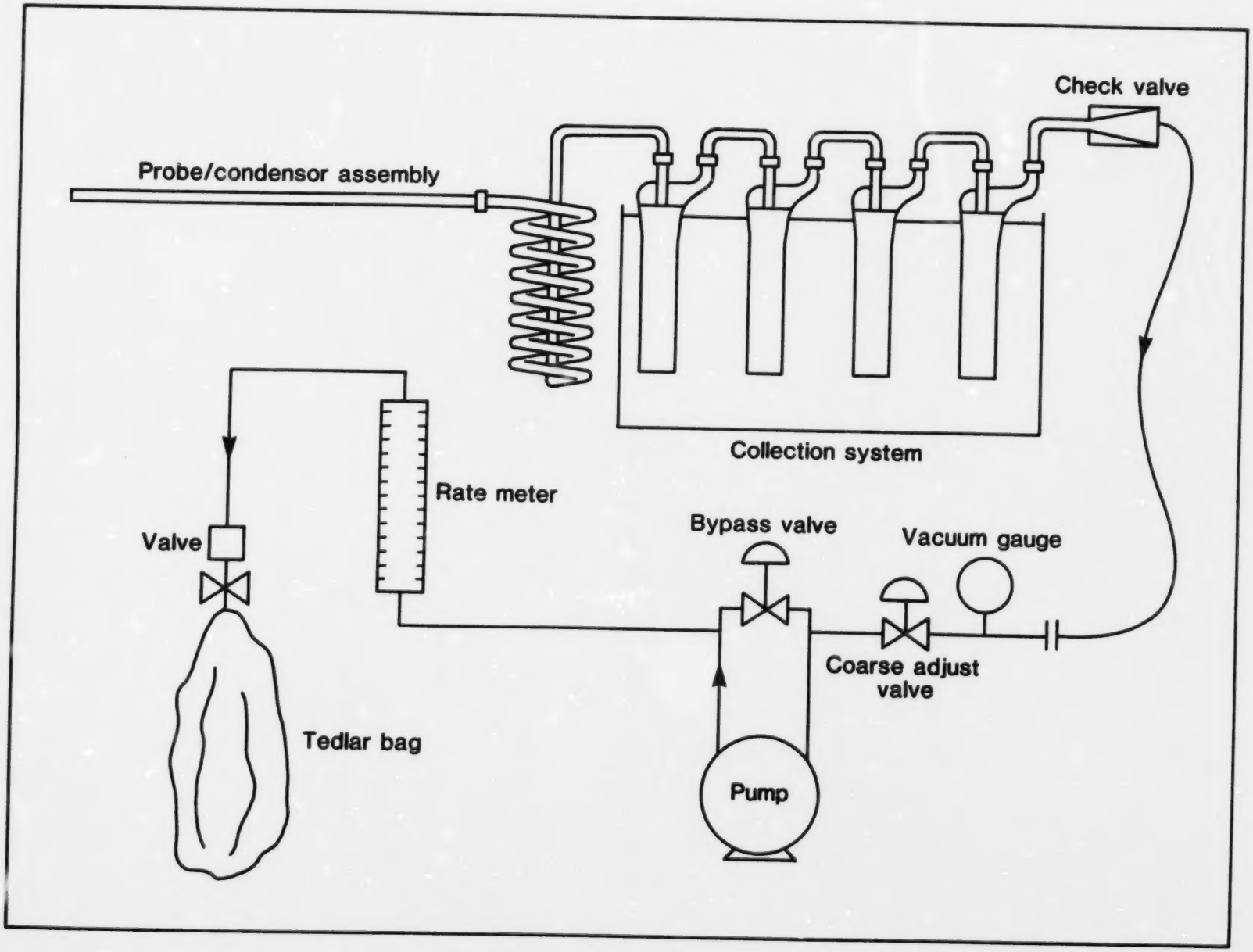

Figure 3.1 Train for Integrated Gas Sampling

then draw a sample into the analyzer and analyze for percentage of CO_2 and O_2. Samples must be taken at the start, midpoint and conclusion of the measurement period. Record the measurements on the data sheet illustrated in Table 3.1.

(b) Integrated Sampling

Assemble the integrated sampling train as shown in Figure 3.2. Leak test the train. Evacuate the Tedlar bag and connect it to the sampling train. Position the sampling probe either at the centre of the stack or at a point at least 1.0 m from the stack wall. Sample at a constant rate and analyze for percentage of CO_2 and O_2. Record the measurements on the data sheet illustrated in Table 3.1.

3.5 CALCULATIONS

Calculate the stack gas molecular weight on a dry basis using Equation 3.1.

$$M_d = 0.44\ (\%\ CO_2) + 0.32\ (\%\ O_2) + 0.28\ [100-(\%CO_2 + \%\ O_2)] \qquad \text{Eq. 3.1}$$

Where

M_d = molecular weight of stack gas on dry basis, $\frac{kg}{kmol}$

$\%\ CO_2$ = percent carbon dioxide by volume on dry basis

$\%\ O_2$ = percent oxygen by volume on dry basis

Determine molecular weight of the stackgas on a wet basis using Equation 3.2.

$$M_s = M_d\ (1-B_{wo}) + 18\ B_{wo} \qquad \text{Eq. 3.2}$$

TABLE 3.1

GAS COMPOSITION DATA SHEET

Plant _____

Location _____

Test _____

Date _____

Operators _____

Time	Test number	$\%CO_2$	$\%O_2$
		Average	

Where

M_s = molecular weight of gas on wet basis, $\frac{kg}{kmol}$

B_{wo} = decimal fraction by volume of water vapour in stack gases, dimensionless

M_d = molecular weight of stackgas on dry basis, $\frac{kg}{kmol}$

METHOD 4:

Determination of Moisture Content of Stack Gas

METHOD 4: DETERMINATION OF MOISTURE CONTENT OF STACK GAS

4.1 PRINCIPLE

A gas sample is extracted from the stack either at a constant rate or isokinetically. Moisture is removed from the sample stream by passing it through a condenser system immersed in an ice bath, and moisture content determined gravimetrically.

If saturated or water droplet laden gas streams are suspected a second determination of moisture content shall be made using either (i) a psychrometric chart, Figure 4.1 or (ii) saturation vapour pressure tables. The lower of the two values obtained shall be considered as the correct moisture content of the stack gas.

4.2 APPLICABILITY

The reference method is applicable for accurate determinations of moisture content in exhaust gases from stationary sources. The method is not applicable if an appreciable amount of condensate other than water is present. Less accurate methods such as wet and dry bulb techniques may be used for approximate estimates of moisture contents to aid in setting isokinetic sampling rate.

4.3 APPARATUS

A standard particulate sampling train, shown in Figure 4.2, and a portable field balance shall be used to determine moisture content of the stack gas.

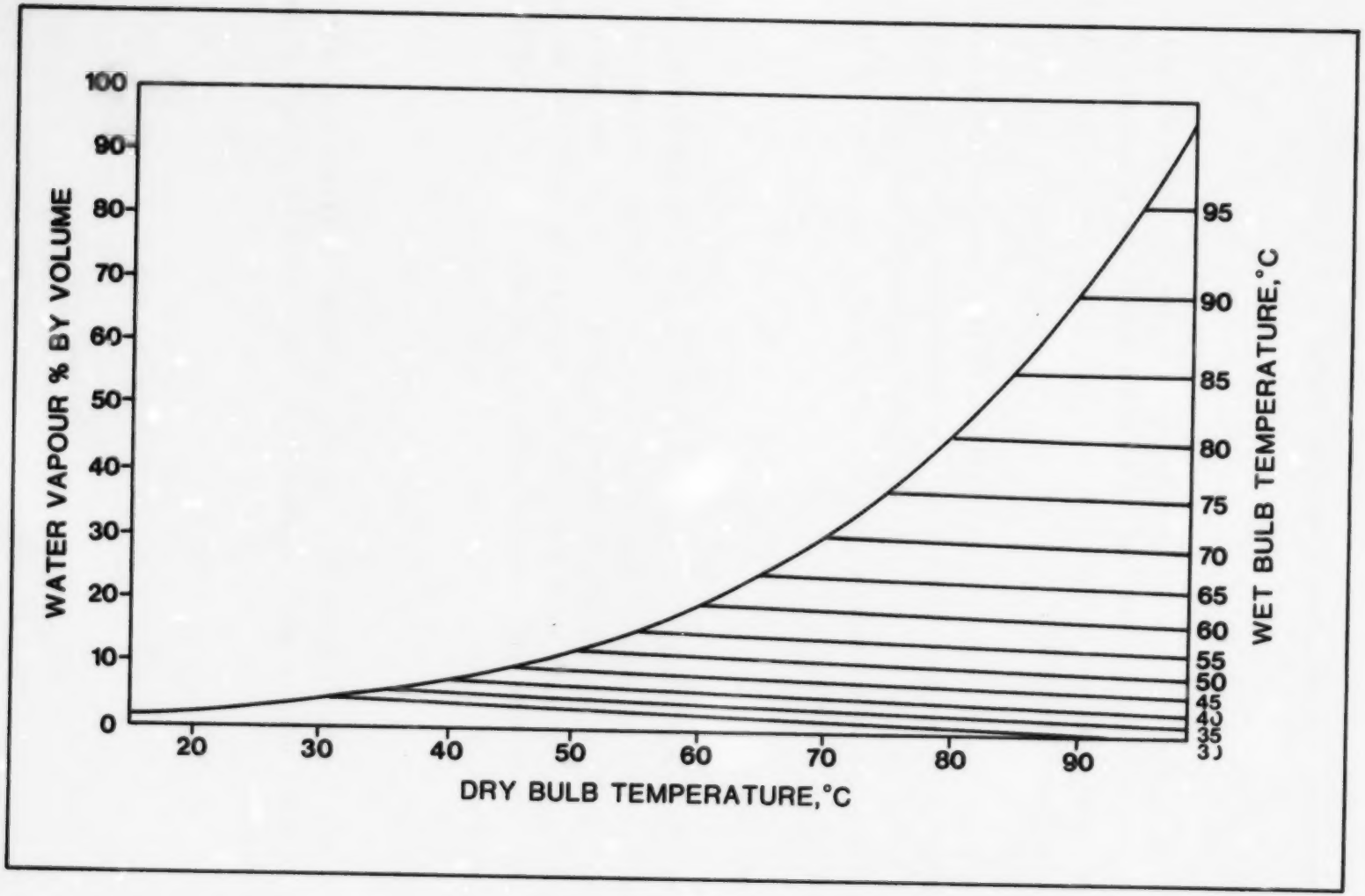

Figure 4.1 High Temperature Psychrometric Chart for Air-Water Vapour Mixtures at 101.3 kPa

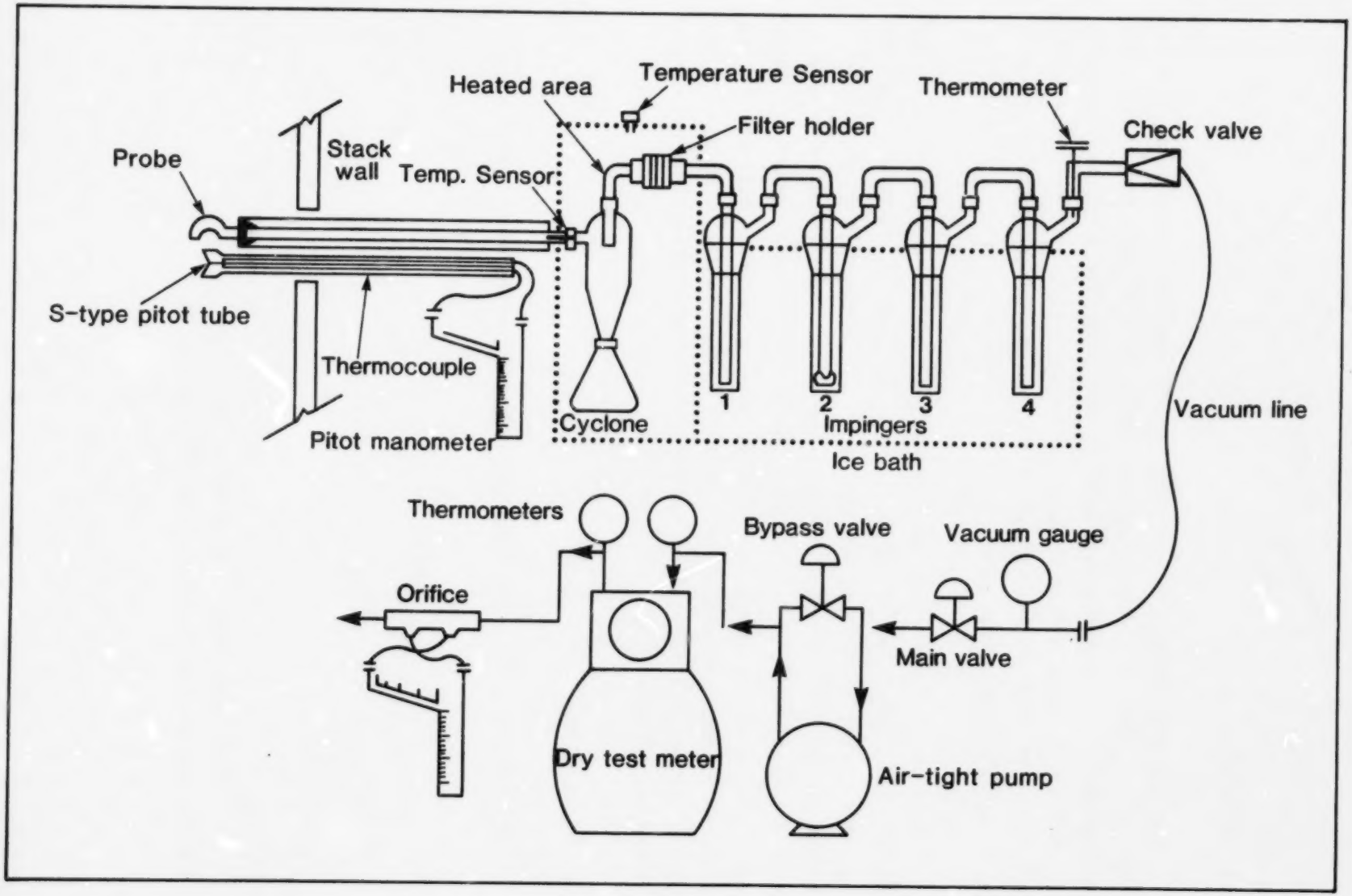

Figure 4.2 Moisture/Particulate Sampling Train

4.4 PROCEDURE

Measure the atmospheric pressure at the sampling site using a barometer. Place measured amounts (approximately 100 mls) of water in the first two impingers. Liquid droplets carried over from the first two impingers are removed in the third unit which serves as a knock-out separator. The last traces of moisture are removed in the fourth impinger containing silica gel or other suitable desiccant.

Weigh the impingers and their contents to the nearest 0.1 g and record the weights. Assemble the sampling train as shown in Figure 4.2 and Leak Test it. Select a sampling position near the centre of the stack or at a minimum distance of one metre away from the walls. Sample isokinetically or at a constant rate of 0.02 m^3/min until a measurable amount of water vapour has been condensed in order to make a reliable estimate of the moisture content. Determine the weight increase in the impingers to the nearest 0.1 gm. As the test progresses, record the data on the data sheet illustrated in Table 4.1.

4.5 CALCULATIONS

Use Equation 4.1 to calculate the reference volume of dry gas sampled.

$$(V_m)_{ref} = \nu V_m \left(\frac{T_{ref}}{T_m}\right)\left(\frac{P_b + \Delta H}{P_{ref}}\right) \qquad \text{Eq. 4.1}$$

Where

$(V_m)_{ref}$ = volume of gas through dry gas meter at reference conditions (293 K, 101.3 kPa), m^3

ν = dry gas meter correction factor, dimensionless

TABLE 4.1

MOISTURE ANALYSIS DATA SHEET

Plant _____

Location _____

Date _____

Barometric Pressure kPa _____

Dry Gas Meter Correction Factor, Dimensionless _____

Total Weight Increase in Impingers, g _____

Time min	Meter volume reading m^3	Meter temperature °C		Orifice pressure drop ΔH kPa
		inlet	outlet	

V_m = volume of gas measured by dry gas meter at meter conditions, m^3
ΔH = average pressure drop across orifice, kPa
T_m = average meter temperature, K
P_b = barometric pressure, kPa
P_{ref} = absolute pressure at reference conditions, 101.3 kPa
T_{ref} = absolute temperature at reference condition, 293 K

Use Equation 4.2 to calculate the volume of water vapour collected.

$$(V_w)_{ref} = \frac{\Delta W \cdot R \cdot T_{ref}}{P_{ref} \cdot M_{H_2O} \cdot 10^6} \qquad \text{Eq. 4.2}$$

Where

$(V_w)_{ref}$ = volume of water vapour collected at reference conditions, m^3
ΔW = the total increase in the weight of impingers, g.

R = ideal gas constant, 8.31 $\frac{\text{kPa m}^3}{\text{kmol K}}$

T_{ref} = absolute temperature at reference conditions, 293 K
P_{ref} = absolute pressure at reference conditions, 101.3 kPa
M_{H_2O} = molecular weight of water, 18 kg/kmol

The moisture content of the gas is then determined by using Equation 4.3.

$$B_{wo} = \frac{(V_w)_{ref}}{(V_w)_{ref} + (V_m)_{ref}} \qquad \text{Eq. 4.3}$$

Where

B_{wo} = fraction by volume of water vapour in the gas stream, dimensionless

$(V_w)_{ref}$ = volume of water vapour in the gas sample at reference conditions, m^3

$(V_m)_{ref}$ = volume of gas sample through the dry gas meter at reference conditions, m^3

METHOD 5:

Determination of Particulate Emissions from Stationary Sources

METHOD 5: DETERMINATION OF PARTICULATE EMISSIONS FROM STATIONARY SOURCES

5.1 PRINCIPLE

Particulate matter shall be withdrawn isokinetically from a specified number of sampling points in the stack and its weight determined gravimetrically. Sampling isokinetically means that the sampling velocity at the nozzle opening is matched with that of the gas stream at the sampling point.

5.2 APPLICABILITY

All of the limitations of methods 1 to 4 are also applicable to this method.

5.3 APPARATUS

Sampling Train

The sampling train for particulate matter shall be assembled as shown in Figure 5.1. The various components of the train are as follows:

Probe

The sampling probe consists of a Pyrex glass, stainless steel or "Incoloy" liner (or equivalent) encased in stainless-steel tubing. The liner shall be equipped with heating elements to maintain a minimum gas temperature of 120°C (at the exit end).

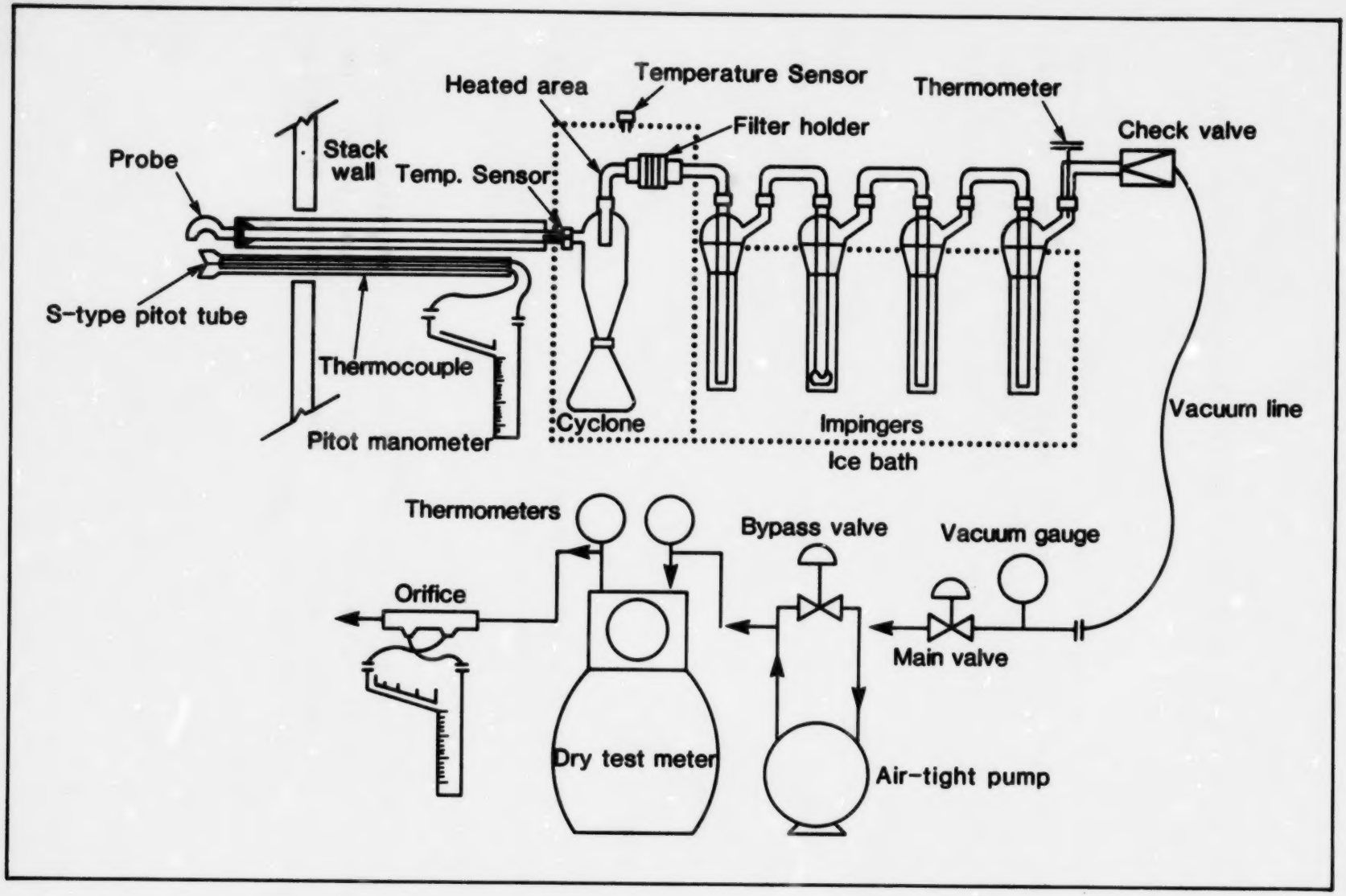

Figure 5.1 Particulate Sampling Train

Sampling Nozzle

The sampling nozzle may be made of stainless steel, Pyrex glass, quartz or other suitable material. The nozzle shall be constructed with an external taper of 30° or less to a sharp leading edge. The inside diameter of the nozzle shall be constant throughout the length of the nozzle.

S-type Pitot Tube

An S-type pitot tube (or equivalent) shall be attached to the probe such that the face opening of the pitot tube and the probe nozzle shall be adjacent and parallel to each other, not necessarily in the same plane. The free space between the nozzle and the pitot tube shall be at least 19 mm. In order to minimize aerodynamic interaction between the pitot tube and sampling probe, the configuration should be as shown in Figures 5.2 and 5.3.

Temperature Gauge

A thermocouple or equivalent capable of measuring stack gas temperature to within 1.5% of the absolute stack gas temperature shall be attached to the pitot tube.

Differential Pressure Gauges

Two inclined manometers or devices of equivalent sensitivity, readable to the nearest 0.13 mm H_2O (0.001 kPa) for pressure values between 0.13 mm and 25 mm H_2O and readable to the nearest 1.3 mm H_2O (0.01 kPa) for pressure values greater than 25 mm H_2O (0.249 kPa), shall be used.

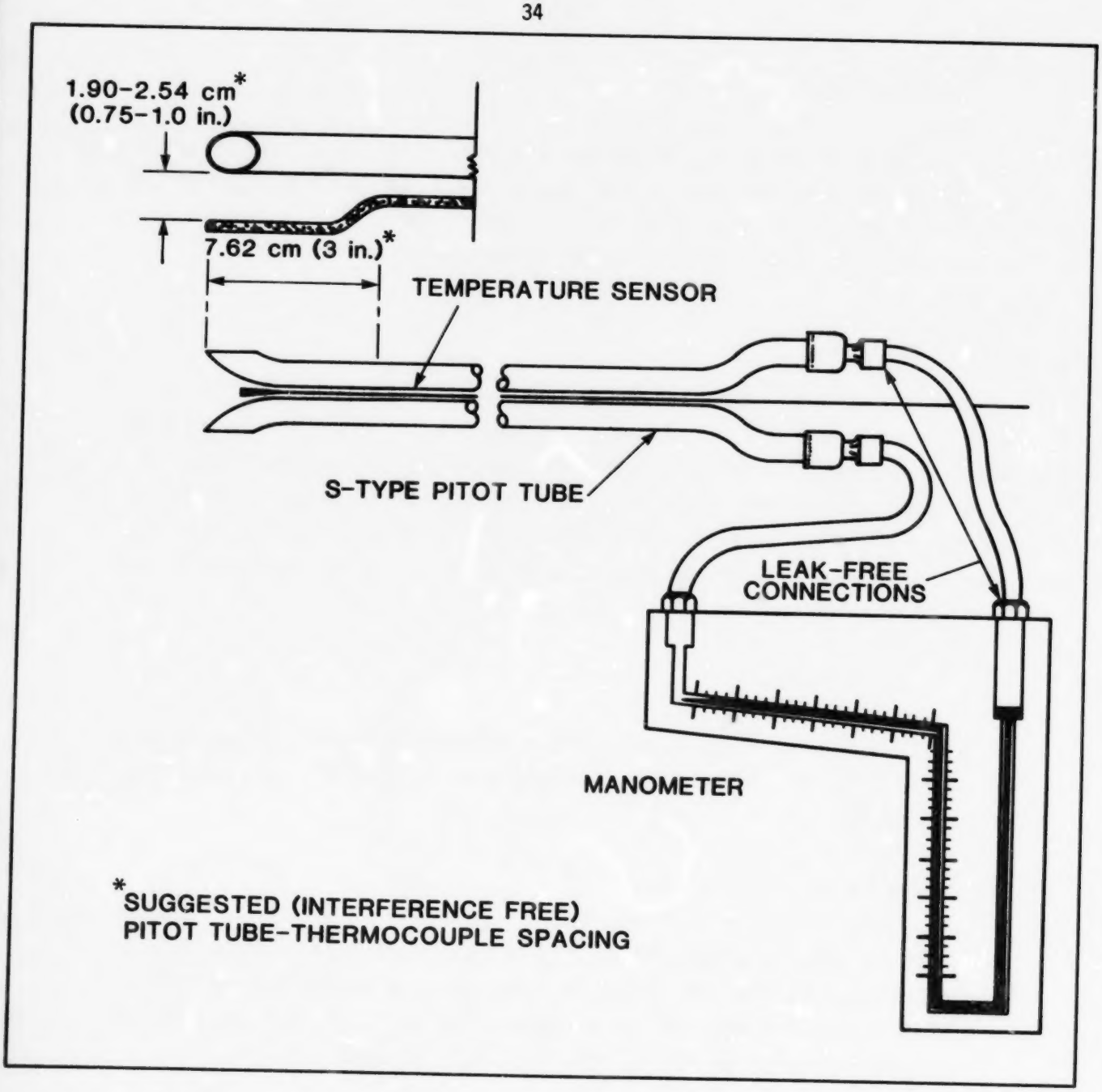

Figure 5.2 S-Type Pitot Tube

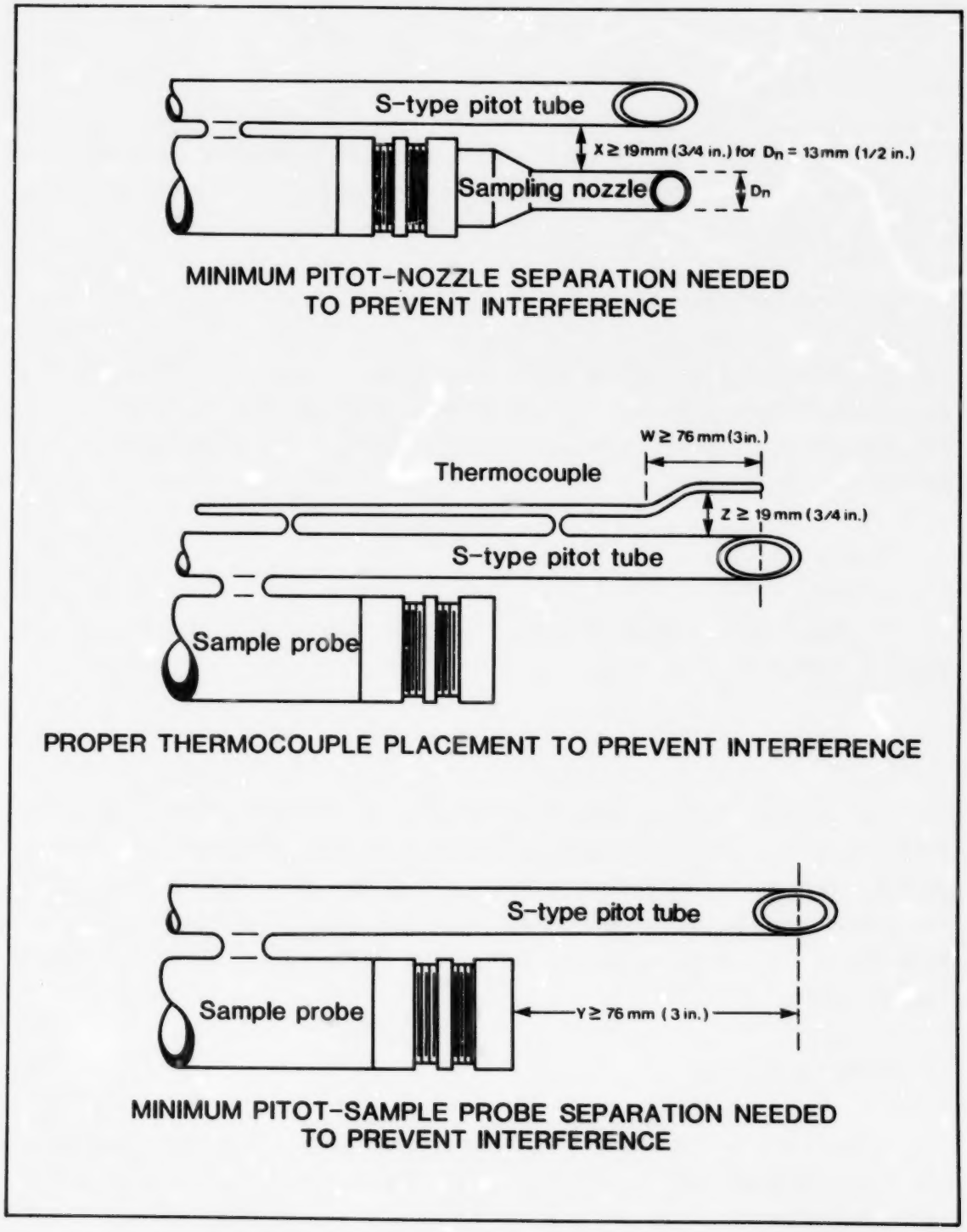

Figure 5.3 Placement of Pitobe (Pitot Tube Assembly) Components

Filter Holder

A Pyrex filter holder with a heating system capable of maintaining a temperature of 120°C shall be used. A filter support of fritted glass and silicone rubber gasket shall be used to avoid leakage.

Cyclone (optional)

A Pyrex miniature cyclone shall be used when appreciable concentrations of particulate are expected. The cyclone will extend the time a filter can be used before plugging. The cyclone must be maintained at a temperature of 120°C.

Filter

A glass fibre filter without organic binder of 0.3 micron porosity shall be used.

Impingers

Four Greenburg-Smith impingers connected in series shall be used. The first, third and fourth impingers are modified by replacing the tip with 1.3 cm I.D. glass tubing extending to about 1.3 cm from the bottom of the flask. The second impinger is of the standard Greenburg-Smith design. A temperature sensor capable of measuring within 1°C is placed at the outlet of the fourth impinger.

Metering System

A metering system consisting of a vacuum gauge, leak-free pump with coarse and fine control valves, calibrated dry gas meter accurate to within

± 1%, a calibrated orifice meter and temperature sensors capable of measuring within 3°C shall be used.

Barometer

A barometer capable of measuring atmospheric pressure to within 0.35 kPa is required.

Brushes

Brushes sized and shaped to clean out probe and probe nozzle and made of any inert material such as nylon, teflon, or stainless steel are required.

5.4 PROCEDURE

Pre-sampling Preparations

The pitot tube (probe assembly), dry gas meter, orifice meter and thermocouples must be calibrated (refer to Appendix) prior to conducting a source test. Such calibration data must be available on request.

Select the sampling site and minimum number of sampling points in accordance with Method 1.

Determine the stack gas static pressure, temperature, molecular weight, moisture content and velocity profile using Methods 2 to 4.

Using these data determine the size of nozzle required for isokinetic sampling. The nozzle size must be selected such that it is not necessary to change the nozzle during the sampling test in order to maintain isokinetic

sampling. Sampling situations that require a change in nozzle size during the sampling test should be referred to the Ministry. Nomographs, programmable calculators, equations, (or equivalent) shall be used along with the data collected during the preliminary traverses to calculate the required isokinetic sampling flow rates during subsequent source sampling tests.

Preparation of Sampling Train

Place 100 mL of deionized or distilled water in each of the first two impingers, leave the third impinger empty, and place approximately 200 g of silica gel in the fourth impinger. Determine the weights of the impingers. Place a preweighed filter (conditioned at 21°C and 50% humidity) in the filter holder. Assemble the sampling train as shown in Figure 5.1. Leak test the sampling train at the sampling site by plugging the probe nozzle and adjusting the vacuum to 50 kPa. A leakage rate of 0.000 57 m^3/minute or greater is unacceptable. Adjust the probe and filter heating system to provide a temperature of 120°C. Place crushed ice around the impingers. During the test run, ensure that the probe and filter housing are maintained at 120°C and that the temperature at the outlet of the impingers is less than 20°C.

Sampling Train Operation

Each traverse point should be sampled a minimum of 2 minutes and a complete set of data readings should be taken at every point. Sampling time must be the same for each point.

Carefully insert the probe assembly into the stack, position the sampling nozzle at the first traverse point and seal the openings around the probe. Point the nozzle directly into the approaching gas stream and secure the entire apparatus to the support system. Immediately start the vacuum

pump and adjust the flow rate to isokinetic conditions. Maintain isokinetic sampling throughout the sampling period by making the necessary adjustments in the sampling flow rate at regular intervals if required or when significant changes occur in stack conditions. Readings must be taken each time an adjustment is made to the sampling flow rate. When more than one set of data are collected during a sampling interval the average reading should be used for that sample point.

At the end of the first sampling point reposition the probe at the next sampling point and repeat the procedure. Record data according to the format shown in Table 5.1. When the traverse is completed, turn off the vacuum pump and withdraw the probe completely. Leak test and transfer the sampling train to the other sampling port and follow the same procedure. Any test which upon completion is found to have contained an error in sampling which is not within ±10% of the calculated isokinetic rate at each point should be rejected.

A minimum of three source tests, or alternately two tests when results are within ±10% (excluding preliminary test), shall be conducted to constitute a valid stack survey.

Sample Recovery

Upon completion of the test, disconnect the probe from the sampling train after it has cooled. Purge corrosive and/or reactive gases from the control module using ambient air. Transfer the probe and filter-impinger assembly to a clean area.

TABLE 5.1

PARTICULATE TEST DATA SHEET

Plant _____

Location _____

Test _____

Date _____

Ambient temperature °C _____

Barometric pressure kPa _____

Assumed moisture content, % _____

Nozzle diameter, cm _____

Probe length, cm _____

Probe temperature, °C _____

Filter holder temperature, °C _____

Meter ΔH@ _____

Test conducted by _____

Traverse point	Time	Stack gas temp. °C	Velocity pressure kPa	Orifice pressure drop kPa	Gas meter volume m^3	Gas meter temp. °C		Temp. of gas leaving last impinger °C	Pump intake vacuum kPa
						Inlet	Outlet		

TABLE 5.2

MOISTURE ANALYSIS DATA SHEET

Plant _____

Location _____

Test _____

Date _____

Test conducted by _____

Impingers

	1	2	3	4
Final Weight, g				
Initial Weight, g				
Difference, g				

Total Weight Increase ΔW = ___ g

TABLE 5.3

PARTICULATE MATTER ANALYTICAL DATA SHEET

Plant _____

Location _____

Test _____

Date _____

Test conducted by _____

	Final weight mg	Tare weight mg	Weight of particulate matter, mg
Container 1: Bottle containing washings from nozzle-probe, cyclone, cyclone flask, front half of filter holder			
Glass fibre filter			
	Total weight of particulate matter M_p, mg		

Carefully remove the filter from the filter holder and transfer it to a numbered envelope. Any particulate matter adhering to the filter holder gasket must also be removed and placed with the filter. Seal the container for transportation to the laboratory.

Wash the internal surfaces of the nozzle-probe assembly with water using a brush to remove particulate adhering to the walls. Place the washings in a numbered container. To the same container add washings from the internal surfaces of the front half of the filter holder and also cyclone and cyclone flask (if required). Take care to remove all particulate matter. Seal the container for transportation to the laboratory. If organics are suspected repeat the procedure using acetone and a separate glass container. Weigh all four impingers and record the weights.

Sample Analysis

In the laboratory, transfer water washings obtained from the nozzle probe assembly, the cyclone and filter holder to a tared weighing dish and evaporate to dryness at ambient temperature and pressure. Desiccate to a constant weight. If acetone is used, carry out a blank determination and perform the evaporation procedure at ambient temperature. Weigh and record the results to the nearest 0.1 mg.

Condition the filter and any loose particulate matter at 21°C and 50% humidity. Weigh and record the results to the nearest 0.1 mg.

5.5 CALCULATIONS

Gas Meter Pressure

Determine the average absolute pressure at the dry gas meter throughout the test using Equation 5.9.

$$P_{m(avg)} = P_b + 0.098\ \Delta H_{(avg)} \qquad \text{Eq. 5.9}$$

Where

$P_{m(avg)}$ = average absolute pressure at the dry gas meter throughout the test, kPa

P_b = barometric pressure, kPa

$\Delta H_{(avg)}$ = average recorded orifice pressure differentials, cm H_2O

Dry Gas Volume

Determine volume of gas, m^3 sampled at reference conditions 293 K and 101.3 kPa using Equation 5.10.

$$V_{m(ref)} = \frac{2.89\ \nu\ P_{m(avg)}\ V_m}{T_{m(avg)}} \qquad \text{Eq.5.10}$$

Where

$V_{m(ref)}$ = volume of gas samples at reference conditions, m^3

ν = dry gas meter correction factor, dimensionless

$P_{m(avg)}$ = average absolute pressure at the dry gas meter throughout the test, kPa

V_m = volume of gas sample recorded on dry gas meter, m^3

$T_{m(avg)}$ = absolute temperature at dry gas meter, K

Concentration of Particulate Matter

Determine concentration of particulate matter in stack gas on dry basis at reference conditions, 293 K and 101.3 kPa in kg/m^3 using Equation 5.11 or in mg/mol using Equation 5.12.

$$C_s = \frac{M_p x 10^{-6}}{V_{m(ref)}} \qquad \text{Eq. 5.11}$$

Where

C_s = concentration of particulate matter in stack gas on a dry gas basis at 293 K and 101.3 kPa, kg/m^3

M_p = total weight of particulate catch from nozzle, probe, cyclone, cyclone flask, front half of filter holder and filter, mg

$V_{m(ref)}$ = volume of gas sampled at reference conditions, m^3

10^{-6} = conversion factor, kg/mg.

$$C_s^1 = \frac{M_p \times 0.024}{V_{m(ref)}} \qquad \text{Eq. 5.12}$$

C_s^1 = concentration of particulate matter in stack gas on a dry basis at reference conditions, mg/mol

$V_{m(ref)}$ = volume of gas sampled at reference conditions (293 K, 101.3 kPa), m^3

Emission Rate

Determine emission rate of particulate matter kg/hr using Equation 5.13.

$$ER_p = 3600\ C_s \cdot Q_s \qquad \text{Eq. 5.13}$$

Where

C_s = concentration of particulate matter in stack gas on dry basis at reference conditions, kg/m^3

Q_s = volumetric flow rate of dry stack gas at 293 K and 101.3 kPa, m^3/s

ER_p = emission rate of particulate matter, kg/hr

Determine percent isokinetic sampling rate at each sampling point using Equation 5.14

$$\% I = \frac{\frac{T_s V_m \nu}{t} \frac{1}{1-B_{wo}} (P_b + 0.098 \Delta H) 100}{(4.71 \times 10^{-3}) T_m \cdot P_s \cdot U_s \cdot D_n^2} \qquad \text{Eq. 5.14}$$

Where

I = ratio of the sampling velocity through the nozzle to stack gas velocity

V_m = volume of gas sampled through gas meter at meter conditions for each point sampled, m^3

t = sampling time for each point sampled, min

B_{wo} = proportion by volume of water vapour in the gas stream

P_s = absolute stack gas pressure, kPa

U_s = stack gas velocity at each point sampled, m/sec

T_s = absolute stack gas temperature for each point sampled, K

T_m = absolute temperature at dry gas meter (average of inlet and outlet temperatures) for each point sampled, K

ν = dry gas meter correction factor, dimensionless

D_n = inside diameter of sampling nozzle, cm

ΔH = orifice pressure differential for each point sampled, cm H_2O

P_b = barometric pressure at the sampling site, kPa

5.6 TEST RESULTS

The following information concerning the source test shall be included in the report.

Report Summary

The summarizing report shall include:

(a) Date
(b) Permit number
(c) Name of plant
(d) Emission source tested
(e) Test objective
(f) Name-plate (rated) capacity
(g) Process production rate during test
(h) Type of operation
(i) Process cycle tested
(j) Sampling location
(k) Test start/stop times
(l) Particulate loading (concentration based or production based as required)
(m) Particulate emission rate
(n) Percent isokinetic sampling at each point
(o) Stack gas flow rate
(p) Field data sheets

Process Description

A brief description of the process, flow charts and documentation of process conditions during sampling may be included in the report.

Test Results

This shall include:

(a) Pertinent operating data of the source tested
(b) Table listing stack test data
(c) Table listing stack gas composition, flow rate, molecular weight, particulate concentration, emission rate and percent isokinetic sampling.

Support Information

(a) All calibration data including procedures used and dates when calibrated
(b) Analytical procedures
(c) Equations used and sample calculations.

BIBLIOGRAPHY

1. Environment Canada, Report EPA 1-AP-74-1, Standard Reference Methods for Source Testing: Measurement of Emissions of Particulates from Stationary Sources, February, 1974.

2. Ministry of Environment, Province of Ontario, Source Testing Code, November, 1980.

3. British Columbia Water Resources Service, Pollution Control Branch, Source Testing Manual for the Determination of Discharge to the Atmosphere, Fourth Edition, August, 1976.

4. Alberta Environment, Source Sampling Code, Publication SSC-1/76.

5. Environmental Protection Agency, Federal Register, Standards of Performance for New Stationary Sources, Part II, Vol. 36, No. 247, pp. 24876-24890 (Dec. 23/71) and Part II, Vol. 41, No. 111, pp. 28060-23090 (June 8, 1976).

6. U.S. Environmental Protection Agency, The EPA Program for the Standardization of Stationary Source Emission Test Methodology - A Review, Publication No. EPA-600/4-76-044, August 1976.

7. American Society of Mechanical Engineers, Determining Dust Concentration in a Gas Stream, ASME Performance Test Code #27, New York, N.Y. (1975).

8. American Society of Mechanical Engineers, "Standard Methods for Sampling Stacks for Particulate Matter", 1971 Book of ASTM Standards, Part 23, Philadelphia, Pa., ASTM Designation D-2928-71 (1971).

9. Devorkin, H., et al., Air Pollution Source Testing Manual, Air Pollution Control District, Los Angeles, Calif. (Nov. 1963).

APPENDIX

Calibration Procedures

METHOD A: CALIBRATION PROCEDURE FOR S-TYPE PITOT TUBE

A.1 PRINCIPLE

The S-type pitot tube and probe assembly are calibrated against a reference (standard) pitot tube with known coefficient. Calibration is conducted in a wind tunnel (or equivalent) which has both uniform and time invariant flow characteristics in the test section.

A.2 EQUIPMENT

Wind Tunnel

A wind tunnel with a flowing gas stream confined either in a circular or rectangular duct; the test section must have a constant cross-sectional area of at least 6000 cm^2 and the flow within the test section must be stable and parallel to the longitudinal axis of the duct. The gas stream is moved by a device capable of generating at least five different stream velocities; these velocities should reasonably cover the range of velocities anticipated in the field. Equipment with alternate specifications may be acceptable but must have prior written approval from the Ministry.

Reference Pitot Tube

A standard pitot tube of known coefficient.

Differential Pressure Gauges

Inclined manometer (or equivalent device) readable to nearest 0.001 kPa (0.13 mm H_2O).

A.3 PROCEDURE

Position the S-type pitot tube (probe assembly) at the centreline of flow and 4-5 equivalent diameters downstream of the reference pitot tube. Seal the pitot tube entry ports. Attach manometers to each of the pitot tubes. Inspect and leak check all pitot lines. Level and zero the manometers.

Turn on the fan and allow the flow to stabilize at the appropriate velocity. Measure and record the velocity pressures from the reference pitot, ΔP_R and the S-type pitot ΔP_S, at 5-6 successive velocities at approximately equally spaced intervals over the required range. Align the pitot so that its tip is pointed directly into the flow. Record the measurements on the data sheet illustrated in Table A.1.

A.4 CALCULATIONS

The S-type pitot coefficient C_P is calculated using equation A.1.

$$C_P = C_R\left(\frac{\Delta P_R}{\Delta P_S}\right)^{1/2} \qquad \text{Eq. A.1}$$

Where

C_P = coefficient of S-type pitot tube

C_R = coefficient of reference pitot tube

TABLE A.1

CALIBRATION CERTIFICATE S-TYPE PITOT TUBE

Date: _____

Pitot I.D.: _____

Nozzle I.D.: _____

Approx. Wind Vel.	Ref. Pitot Vel. Press.		S-Type Pitot Vel. Press.	
	ΔPR	$CR\sqrt{\Delta PR}$	ΔPS	$\sqrt{\Delta PS}$

CALIBRATION EQUATION

$C_R\sqrt{\Delta P}_R = C_p\sqrt{\Delta P}_S$ $\qquad$ C_R = _____

C_p = _____

ATTACHMENTS

Calibration Curve _____

ΔP_R = velocity pressure measured by reference pitot

ΔP_S = velocity pressure measured by S-type pitot

Plot graph of $(\Delta P_S)^{1/2}$ versus $(\Delta P_R)^{1/2}$.

Determine the slope and calculate C_p.

METHOD B: CALIBRATION PROCEDURE FOR DRY GAS METER AND ORIFICE METER

B.1 PRINCIPLE

The dry test and orifice meters of the particulate sampling train are calibrated using a wet test meter.

B.2 EQUIPMENT

West Test Meter

A wet test meter or equivalent capable of measuring 0.028 m^3 per revolution with ± 1% accuracy.

B.3 PROCEDURE

Dry Gas Meter

Connect the wet test meter as shown in Figure B.1. Ensure that a drying tube is installed between the wet test meter and pump. Start the pump and allow the system to come to equilibrium. Adjust the flow through the system to approximately 0.007 - 0.014 m^3/min. After the warm-up period, run tests and record the required parameters on the data sheet illustrated in Table B.1.

Orifice Meter

Disconnect the wet test meter. Ensure that a drying tube is installed before the pump. Start the pump and allow the system to come to equilibrium. After the warm-up period, run tests and record the required parameters on the data sheet illustrated in Table B.2.

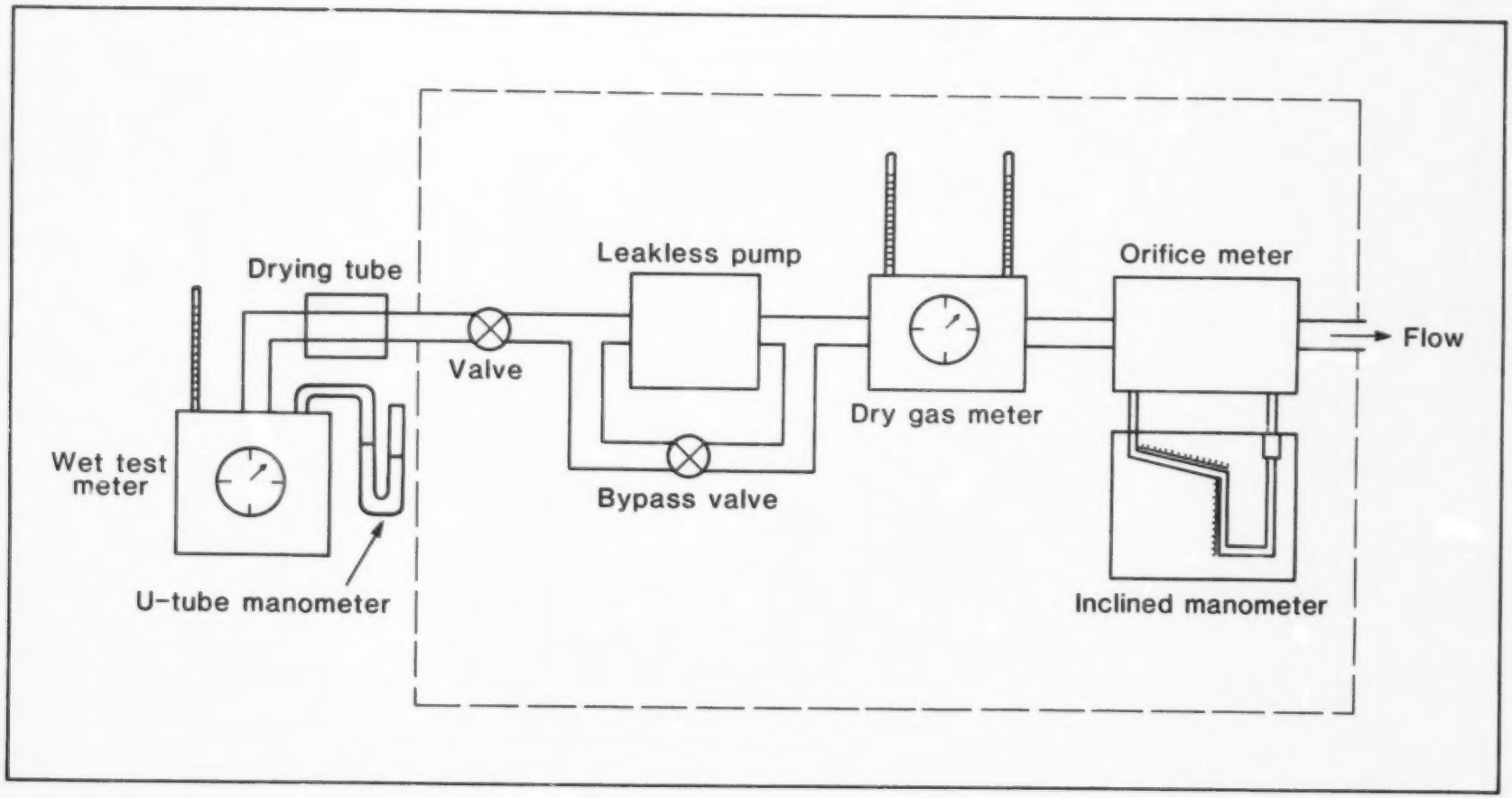

Figure B1 Assembly for Calibration of Dry Gas and Orifice Meters

TABLE B.1

DRY GAS METER CALIBRATION CERTIFICATE

Date: _____
Console I.D.: _____

PARAMETER SUMMARY

	Run No. 1	Run No. 2	Run No. 3
T_a = ambient (wet test meter) temp. °C			
ΔP = press. diff. at wet test meter, kPa			
P_b = atmospheric pressure, kPa			
P_v = Vapor press. water at temp. T_a, kPa			
ΔH = press. diff. at orifice, kPa			
T_i = dry test inlet temp. °C			
T_o = dry test outlet temp. °C			
R_i = initial dry test vol. m^3			
R_f = final dry test vol. m^3			
V_i = initial wet test vol. m^3			
V_f = final wet test vol. m^3			
$P_W = P_b + \Delta P$, kPa			
$P_D = P_b + \Delta H$, kPa			
$T_W = T_a + 273$, K			
$T_D = [(T_i + T_o)/2] + 273$, K			
$B_w = P_v/P_b$			
CALCULATED ν VALUE			

CALIBRATION EQUATION $\nu = \dfrac{V_f - V_i}{R_f - R_i} [(P_w/P_D)(T_D/T_w)]\cdot(1 - B_w)$

ν(MEAN) = _____

AUTHORIZATION _____
Calibration Section

TABLE B.2

ORIFICE METER CALIBRATION CERTIFICATE

Date: _____
Console I.D.: _____

PARAMETER SUMMARY

M_d = Mol. wet dry air, $\frac{kg}{kmol}$	28.95					
P_b = atmospheric pressure, kPa						
ν = dry gas meter calib. const.						
ΔH = orifice press. diff, kPa						
R_i = initial dry gas vol, m^3						
R_f = final dry gas vol, m^3						
Δt = meas. interval (min)						
$Q_m = \nu (R_f - R_i)/\Delta t$, m^3/min						
T_o = outlet dry gas temp., °C						
$T_m = T_o + 273$, K						
$P_m = P_b + \Delta H$, kPa						
$(T_m/P_m \cdot \Delta H/M_d)^{1/2}$						

CALIBRATION EQUATION

$Q_m = K_o \ (T_m/P_m \cdot \Delta H/M_d)^{1/2}$

K_o = _____

ATTACHMENTS

Calibration Curve _____

AUTHORIZATION

_____
Calibration Section

B.4 CALCULATIONS

Dry Gas Meter

Calculate ν, the ratio of the wet test meter to dry test meter volume using equation B.1.

$$\nu = \frac{V_f - V_i}{R_f - R_i} \; (P_W/P_D)(T_D/T_W) \cdot (1 - Bwo) \qquad \text{Eq. B.1}$$

Where

ν = ratio of wet test meter volume to dry test meter volume, dimensionless

P_b = absolute barometric pressure, kPa

ΔP = pressure drop across wet test meter kPa

P_W = $P_b + \Delta P$, kPa

V_f = final wet test volume m^3

V_i = initial wet test volume, m^3

R_f = final dry test volume, m^3

R_i = initial dry test volume, m^3

ΔH = pressure drop across the orifice meter, kPa

P_D = $P_b + \Delta H$, kPa

Bwo = fraction by volume of water vapour passing through the wet test meter calculated from partial pressure data = P_v/P_b

T_i = dry test meter inlet temperature, °C

T_o = dry test meter outlet temperature, °C

T_D = $[(T_i + T_o)/2] + 273$, K

T_a = ambient (wet test meter) temperature, °C

T_w = $T_a + 273$, K

P_v = absolute vapour pressure of water at temperature T_a, kPa

P_b = absolute barometric pressure, kPa

Orifice Meter

Flow through the orifice meter may be determined using Equation B.2.

$$Q_m = K_o \left(\frac{T_m}{P_m} \cdot \frac{\Delta H}{M_d} \right)^{1/2} \qquad \text{Eq. B.2}$$

Where

K_o = proportionality constant

$= \frac{m^3}{min} \frac{kg}{K\ kmol}^{1/2}$

T_o = dry test meter outlet temperature °C

$T_m = T_o + 273$, K

P_b = absolute barometric pressure, kPa

ΔH = pressure drop across the orifice meter, kPa

$P_m = P_b + \Delta H$, kPa

M_d = molecular weight of dry air, 28.95 $\frac{kg}{kmol}$

Q_m = flow through the orifice meters, m^3/min

R_i = initial dry gas volume, m^3

R_f = final dry gas volume, m^3

The proportionality constant K_o is specific for the orifice meter being calibrated and is determined by varying the flow rate over the working range of the orifice meter and plotting Q_m versus $(T_m/P_m \cdot \Delta H/M_d)^{1/2}$.